WIF3004 SOFTWARE ARCHITECTURE AND DESIGN PARADIGMS

Lecture – Example of Views and Structures (V&B)

Do not upload any materials (teaching materials such as lecture notes; questions and sample answers of tutorials/labs/assignments/projects/tests/quizzes/exams/etc.; audio/video recordings or photos/screen shots of live or online lectures/tutorials/labs/chats/presentation/etc.; and your solutions, etc.) of this course anywhere online due to copyright and privacy. You can upload your solutions to Spectrum. Thank you for your cooperation.

Outline

- Example of Views and Structures (V&B)

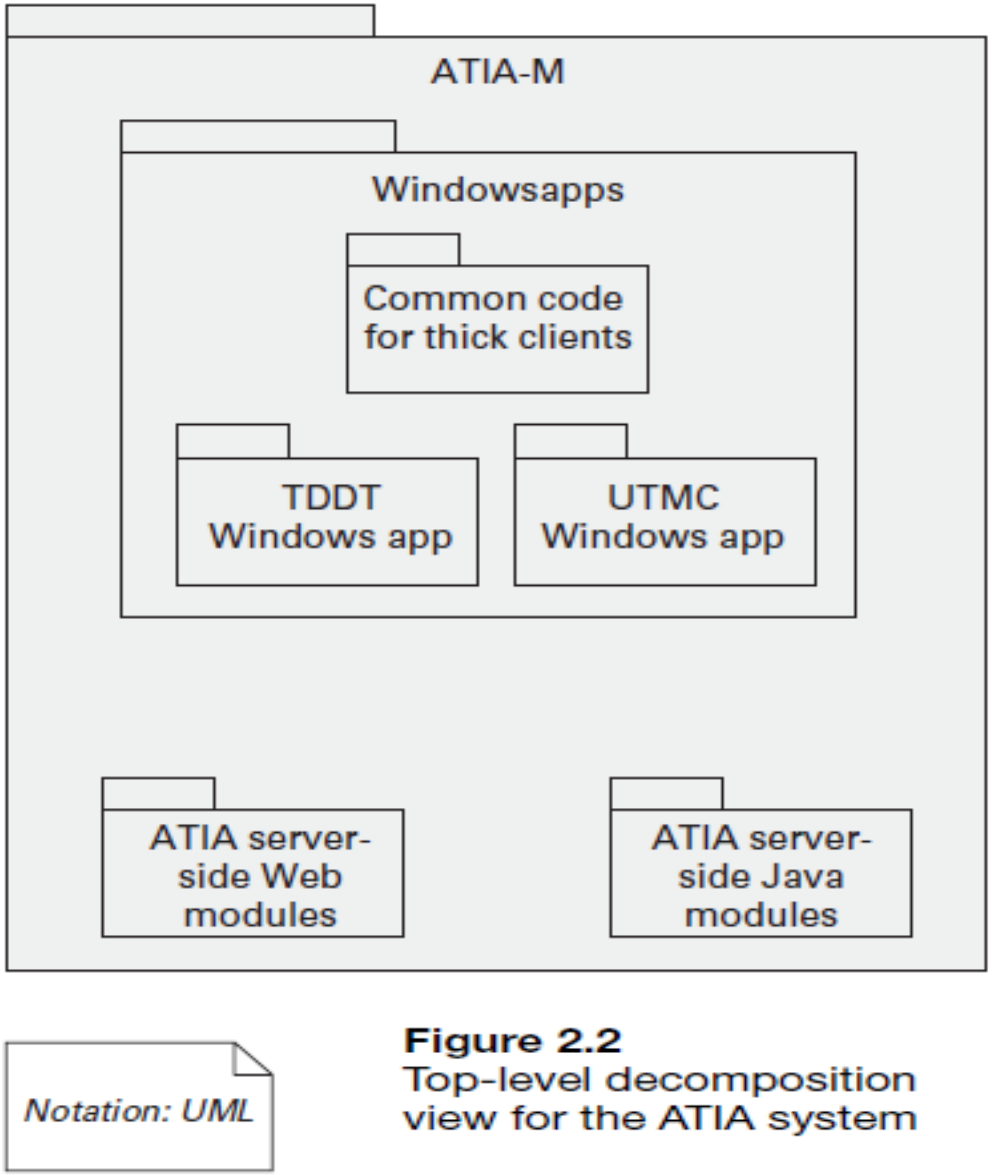

Figure 2.2
Top-level decomposition view for the ATIA system

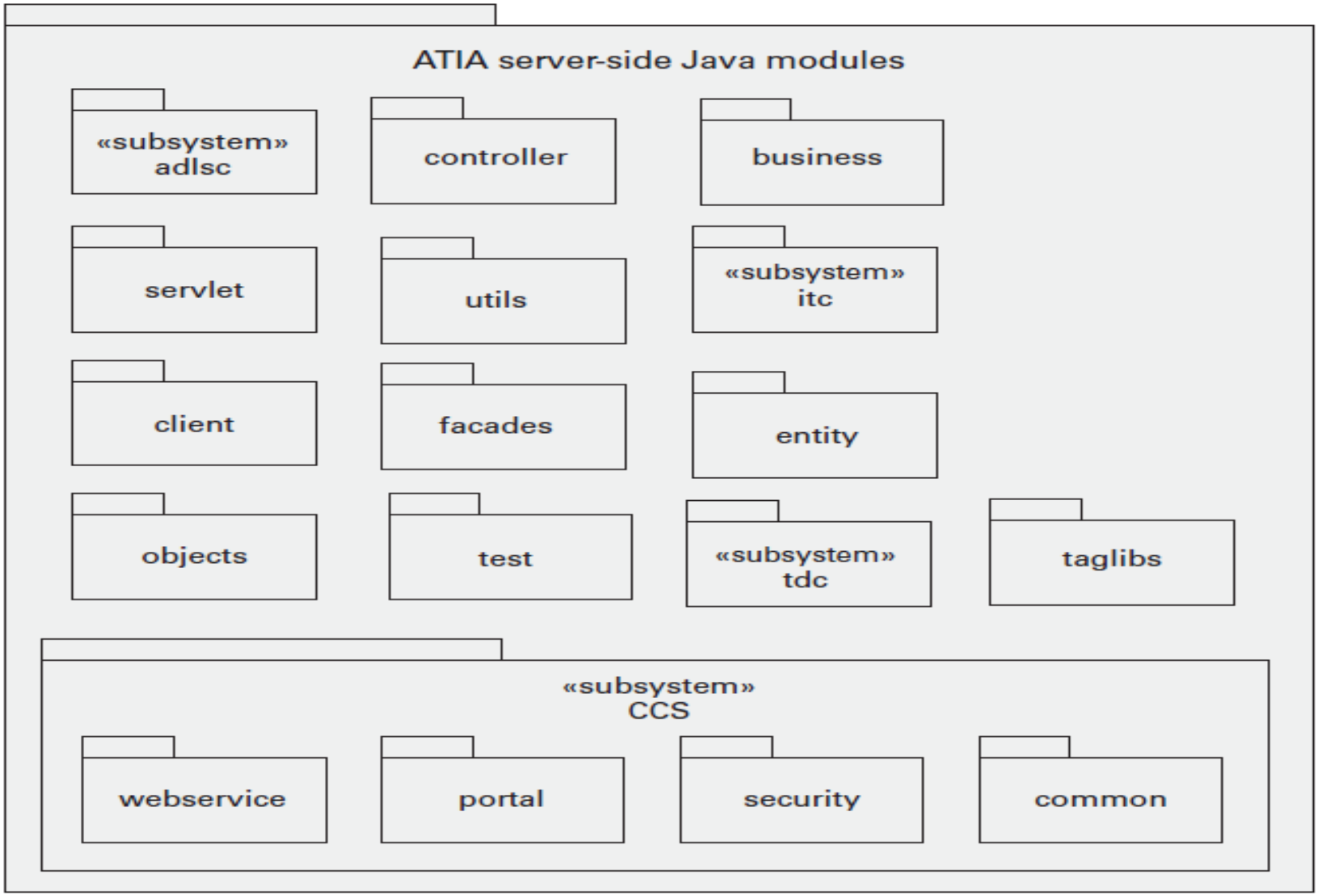

Figure 2.3
Refinement of ATIA-M server-side Java modules showing how it is further decomposed into submodules

Notation: UML

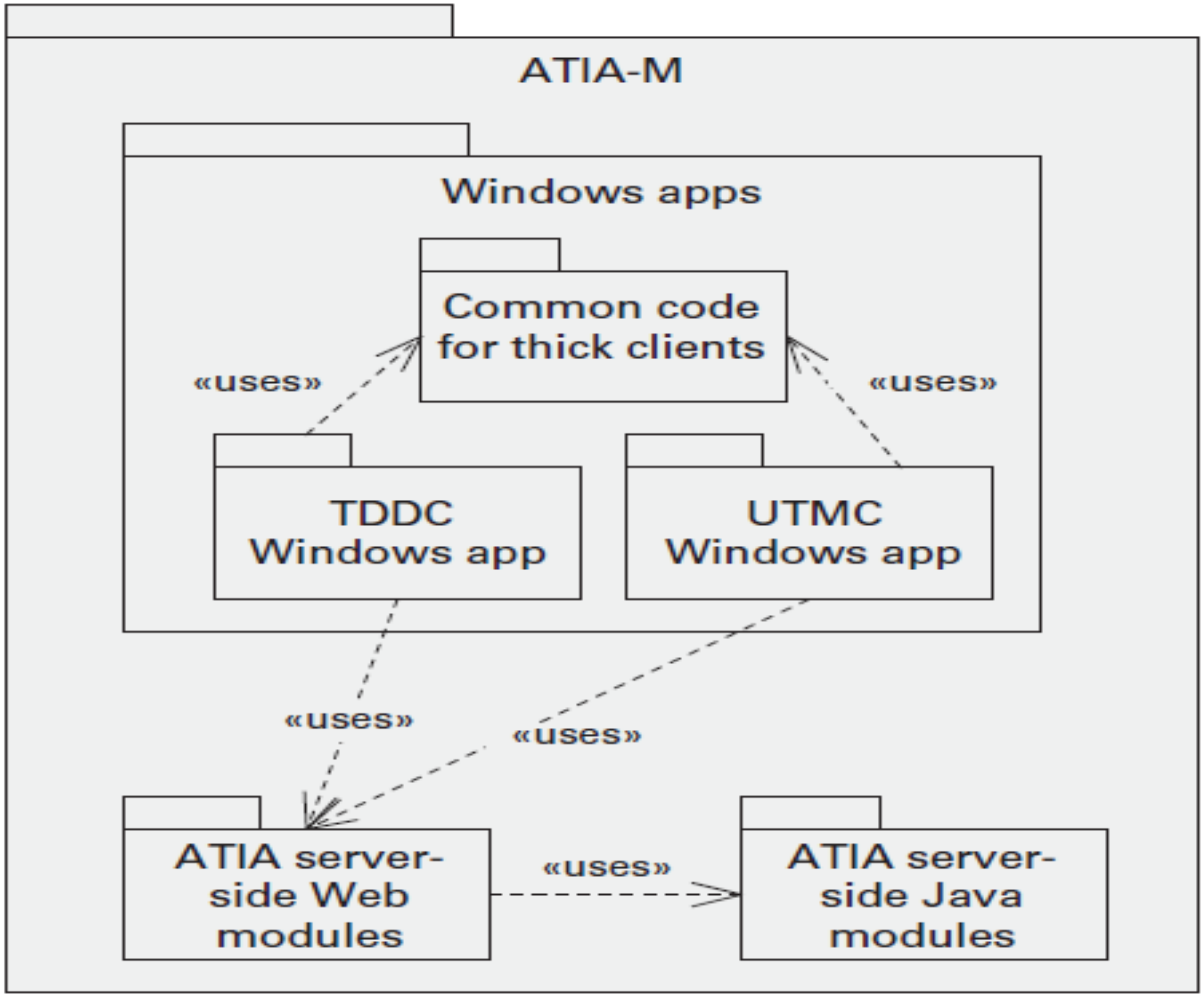

Figure 2.10
Top-level uses view for the ATIA-M system

Notation: UML

Figure 2.8
UML package diagram showing <<uses>> dependencies

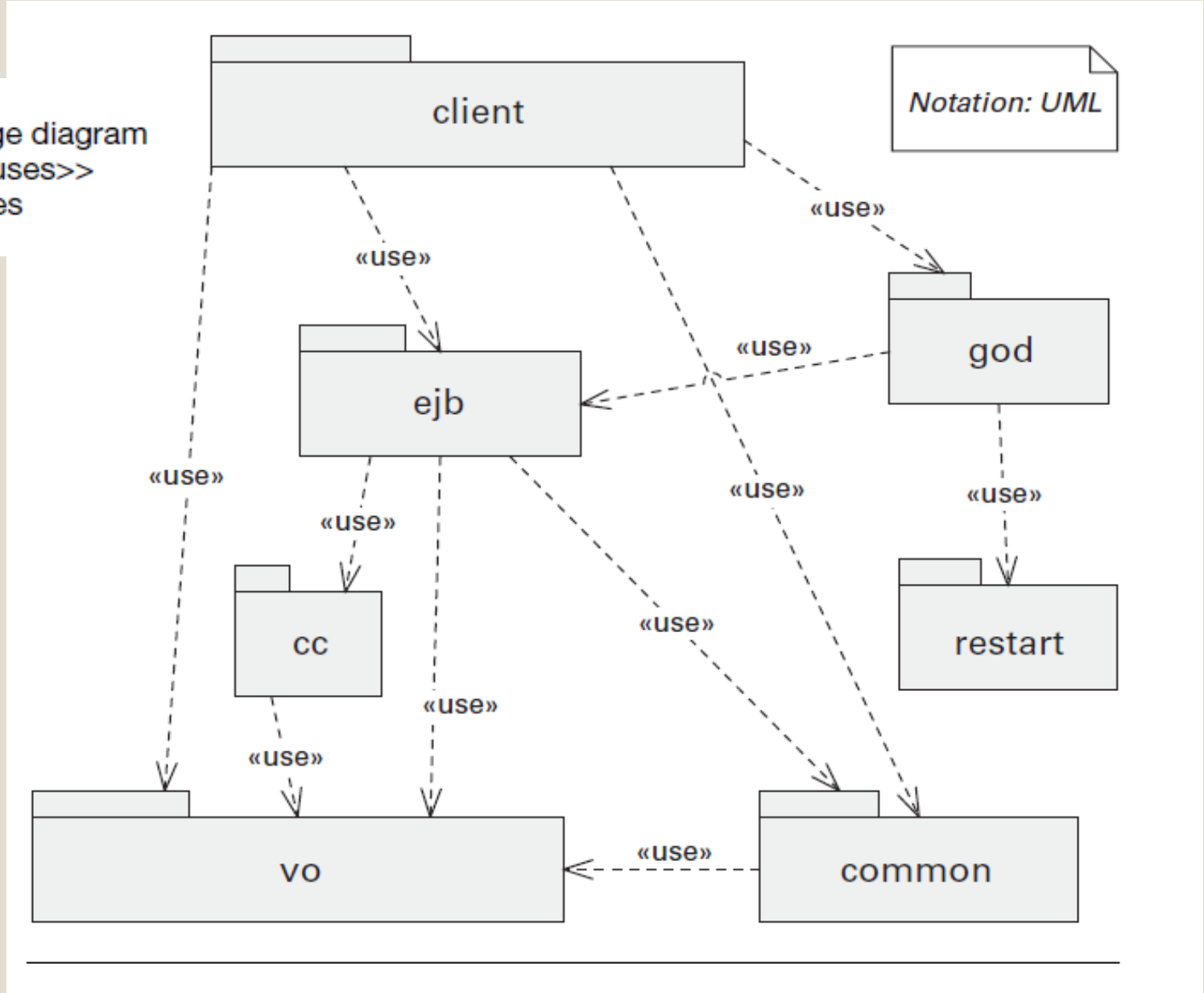

Figure 2.6
In this uses view, suppose the incremental development plan called for module admin.client in the next release. Based on the *uses* relation, the diagram highlights what other modules need to be present: admin.core, dao, and util.

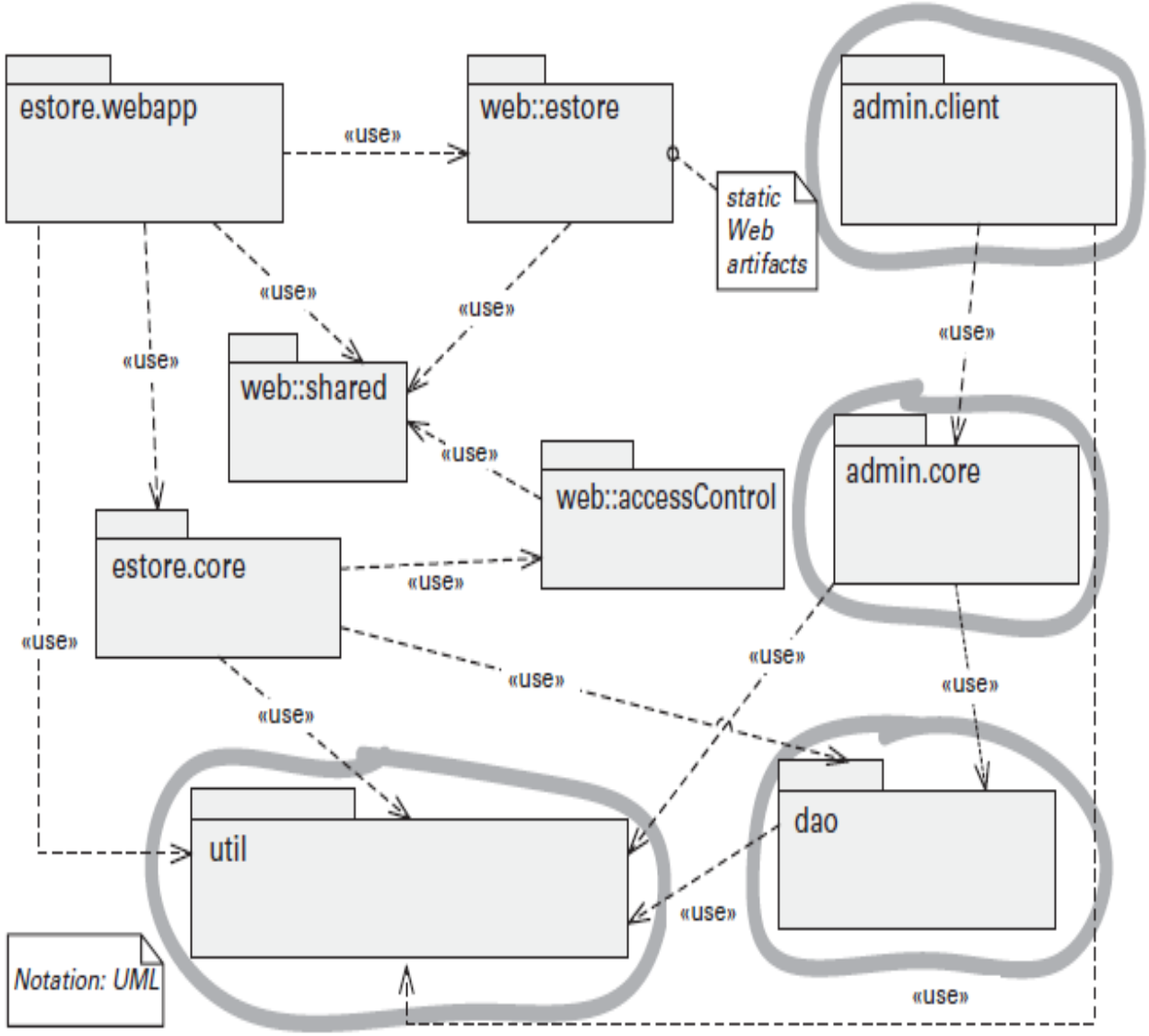

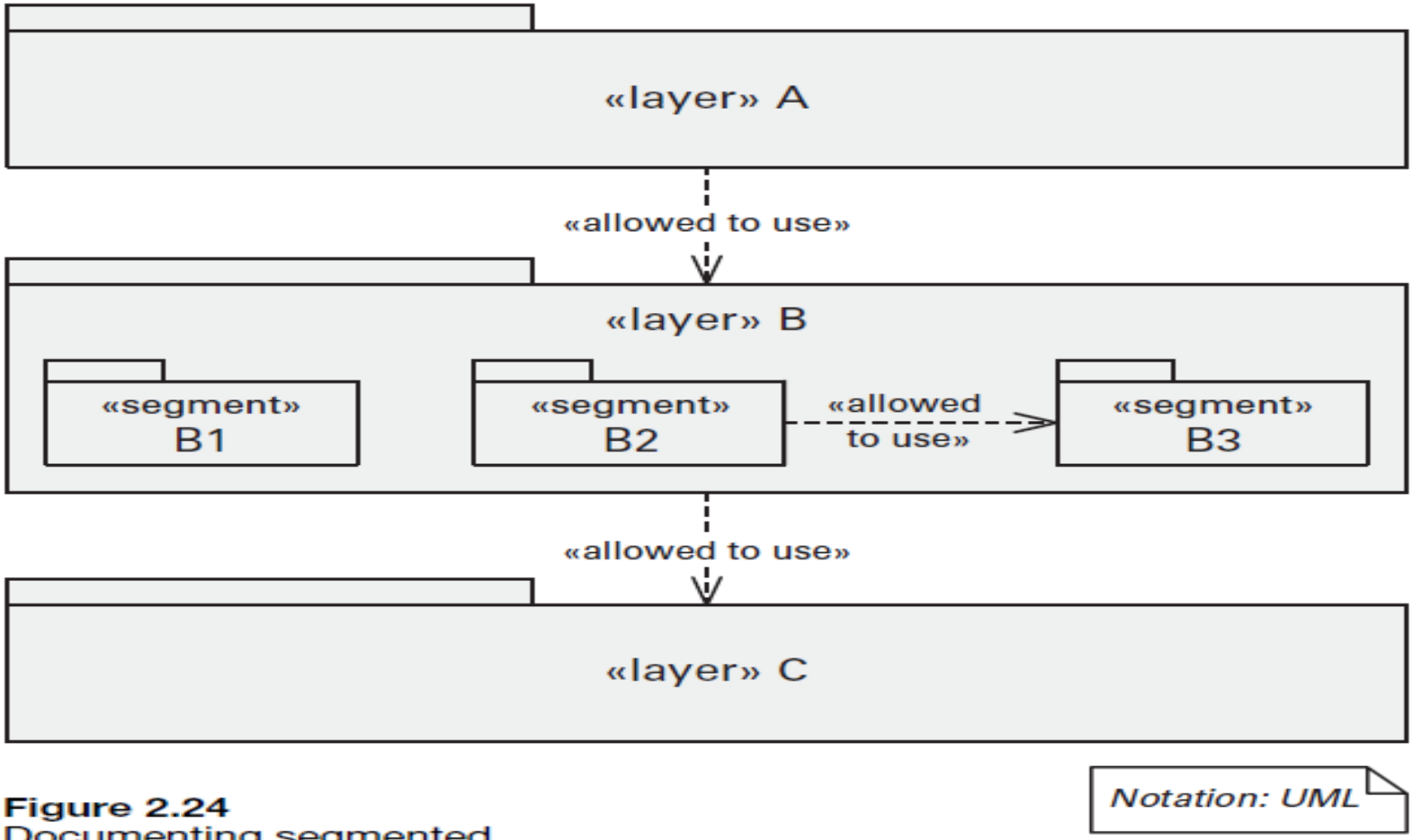

Figure 2.24
Documenting segmented layers in UML. If segments in a layer are allowed to use each other, then <<allowed to use>> dependencies must be added among them as well.

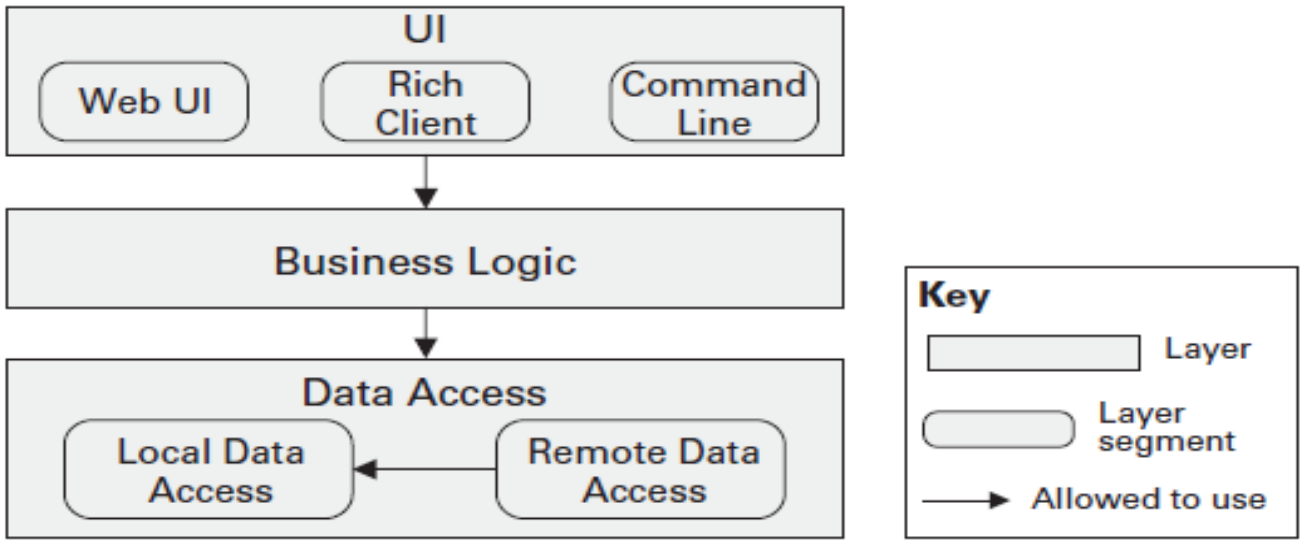

Figure 2.20
Layered design with segmented layers

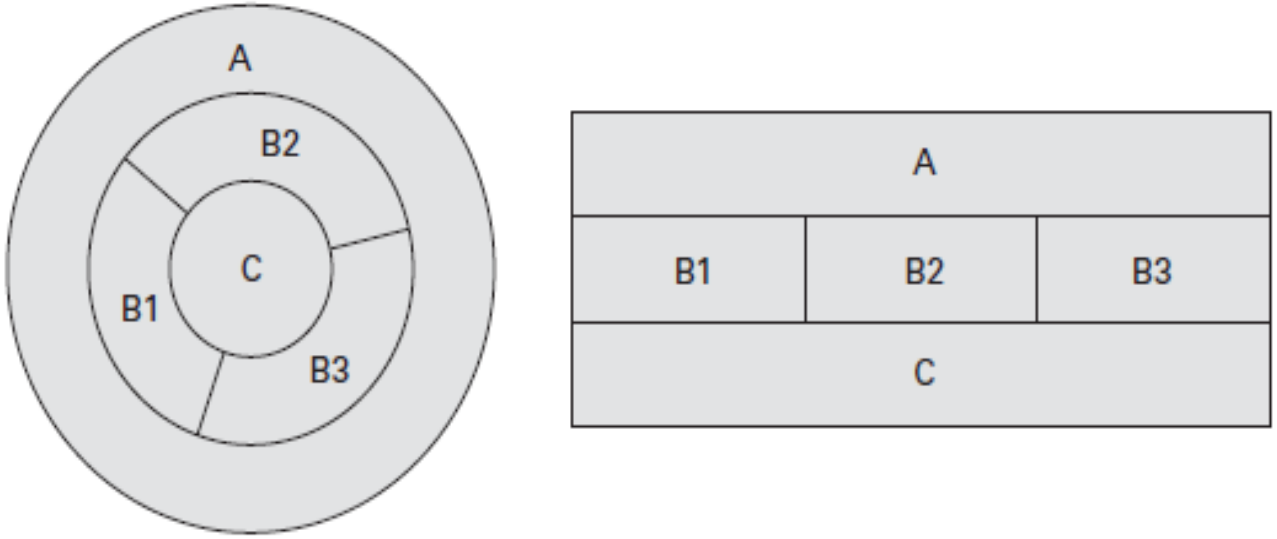

Figure 2.21
A layered design shown as concentric rings and as a stack of boxes. Are these two representations equivalent?

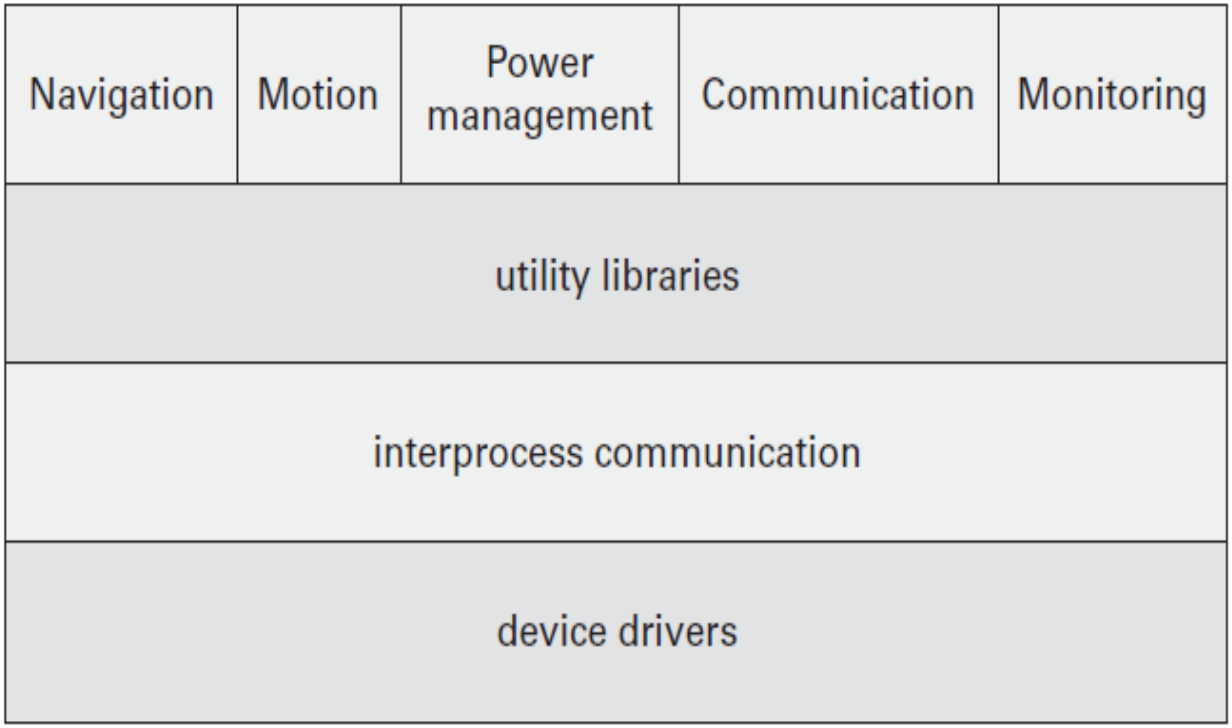

Figure 2.5
Layered design of a hypothetical exploratory robot system

Figure 2.14
The primary presentation for ArchE's generalization view. This system uses internally a rule engine, and many operations are defined on a class called Fact. In addition, specific functionality exists to deal with different kinds of facts and hence the generalization in this figure. The classes shown here also appear in other diagrams, which show the attributes and operations available in each class, as well as *uses* relations among these and other modules that are part of the system.

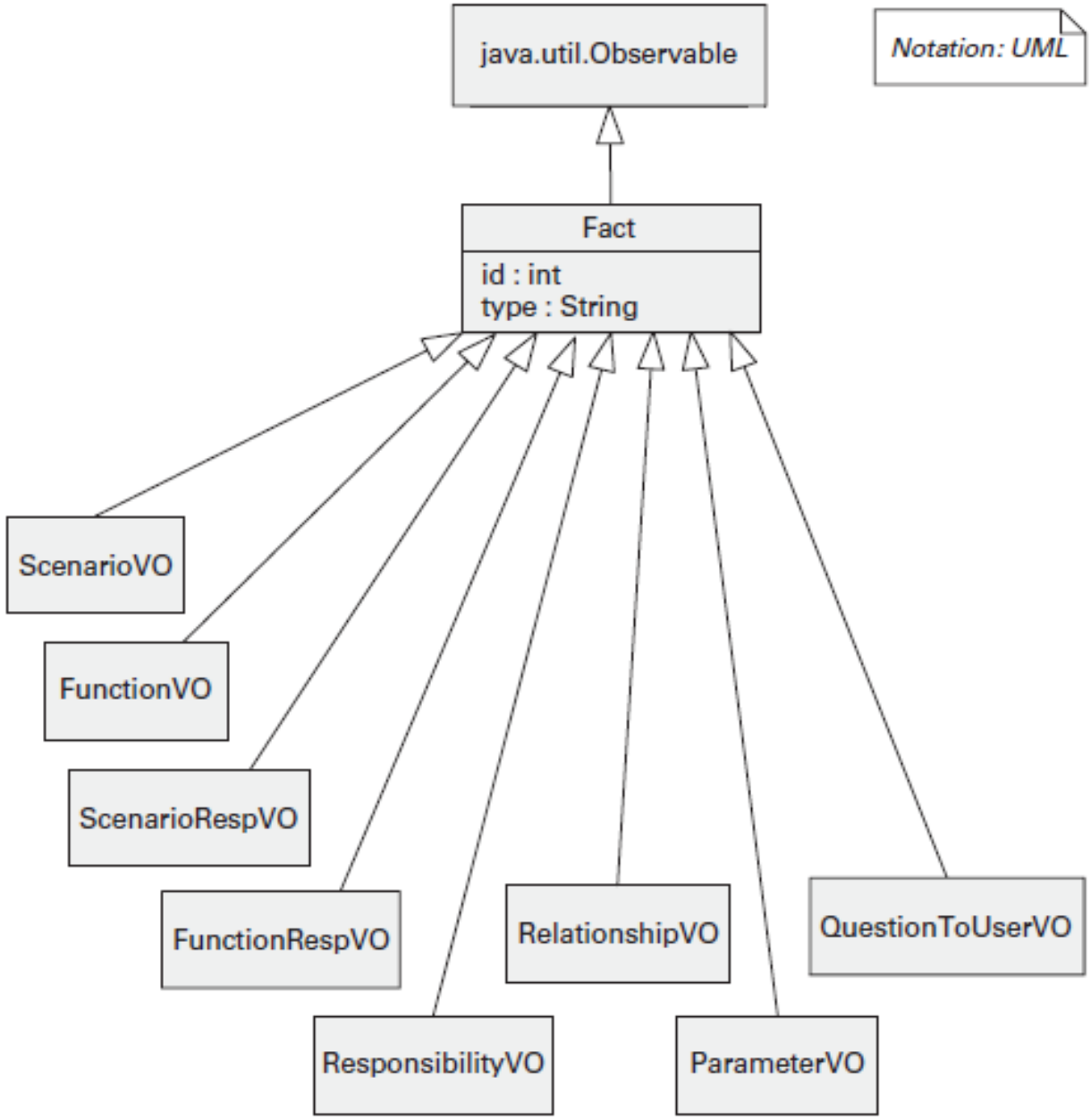

Figure 2.38
First draft of a conceptual data model. This and the next two diagrams are fragments of an online order-processing system at different stages.

Figure 2.39
Logical data model that has evolved from the conceptual data model in Figure 2.38

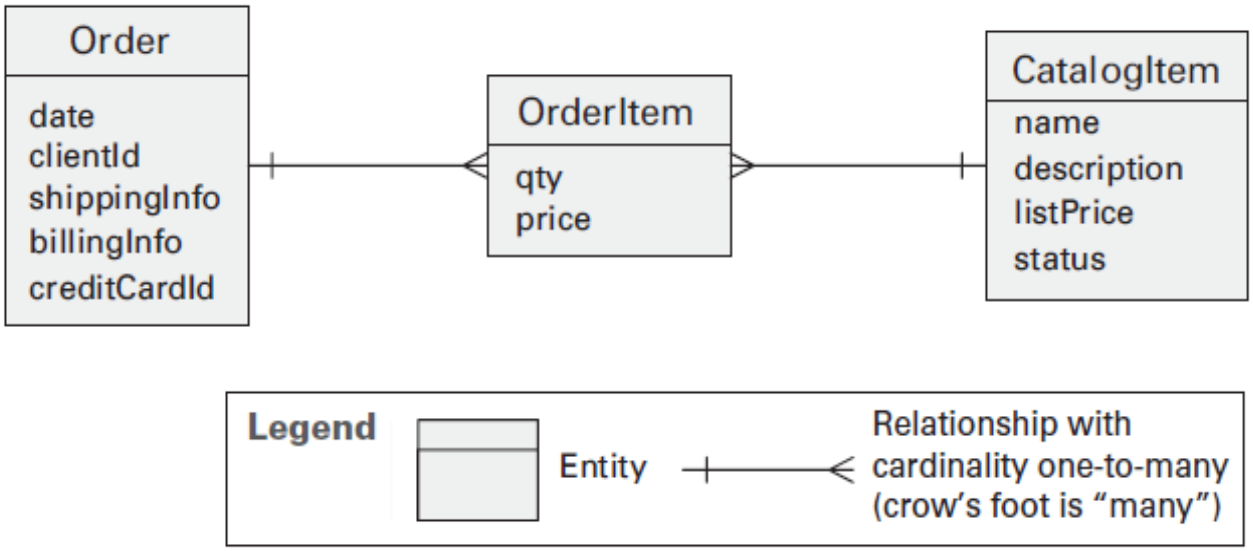

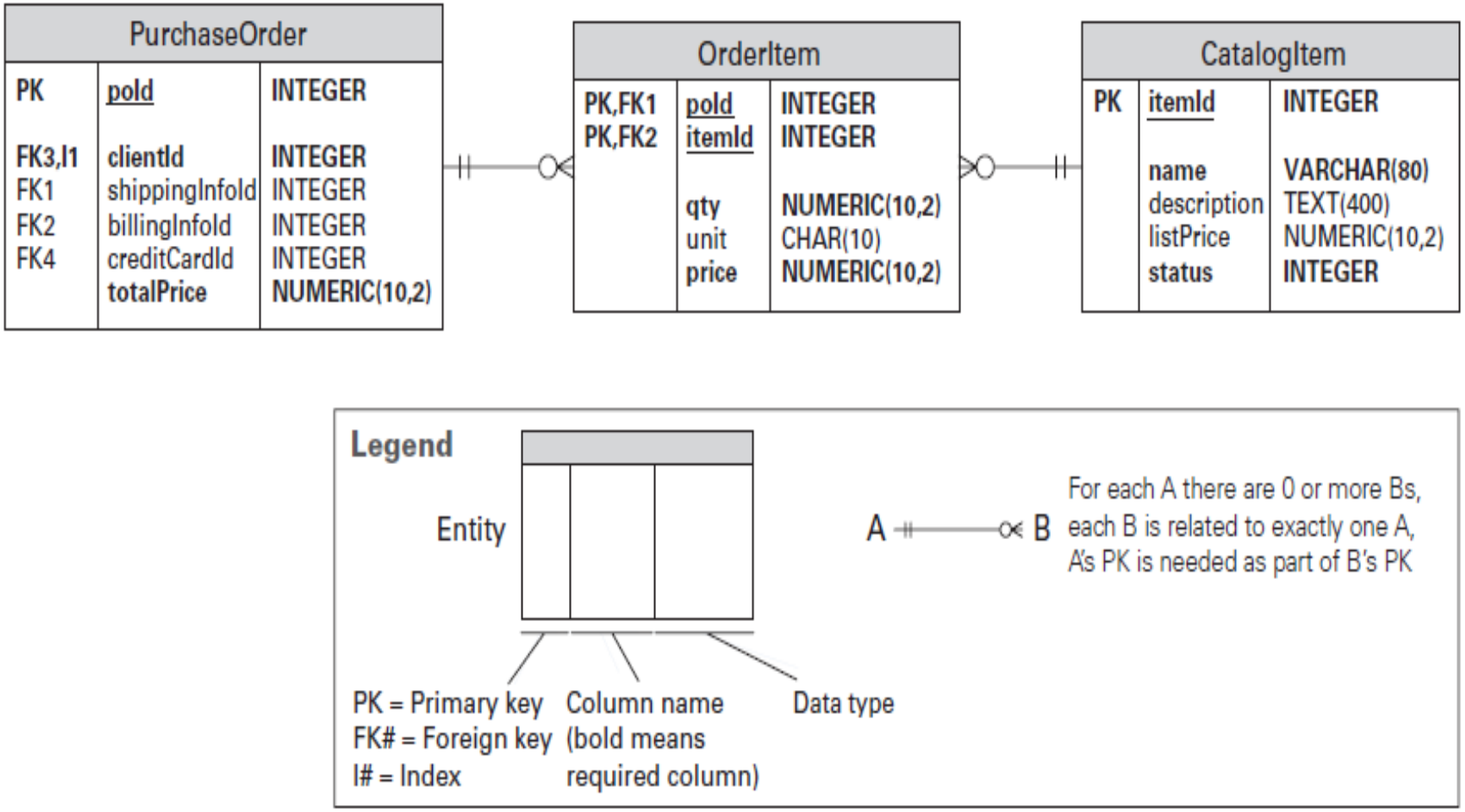

Figure 2.40
Physical data model that was created by adding implementation details and optimizations to the logical data model in Figure 2.39

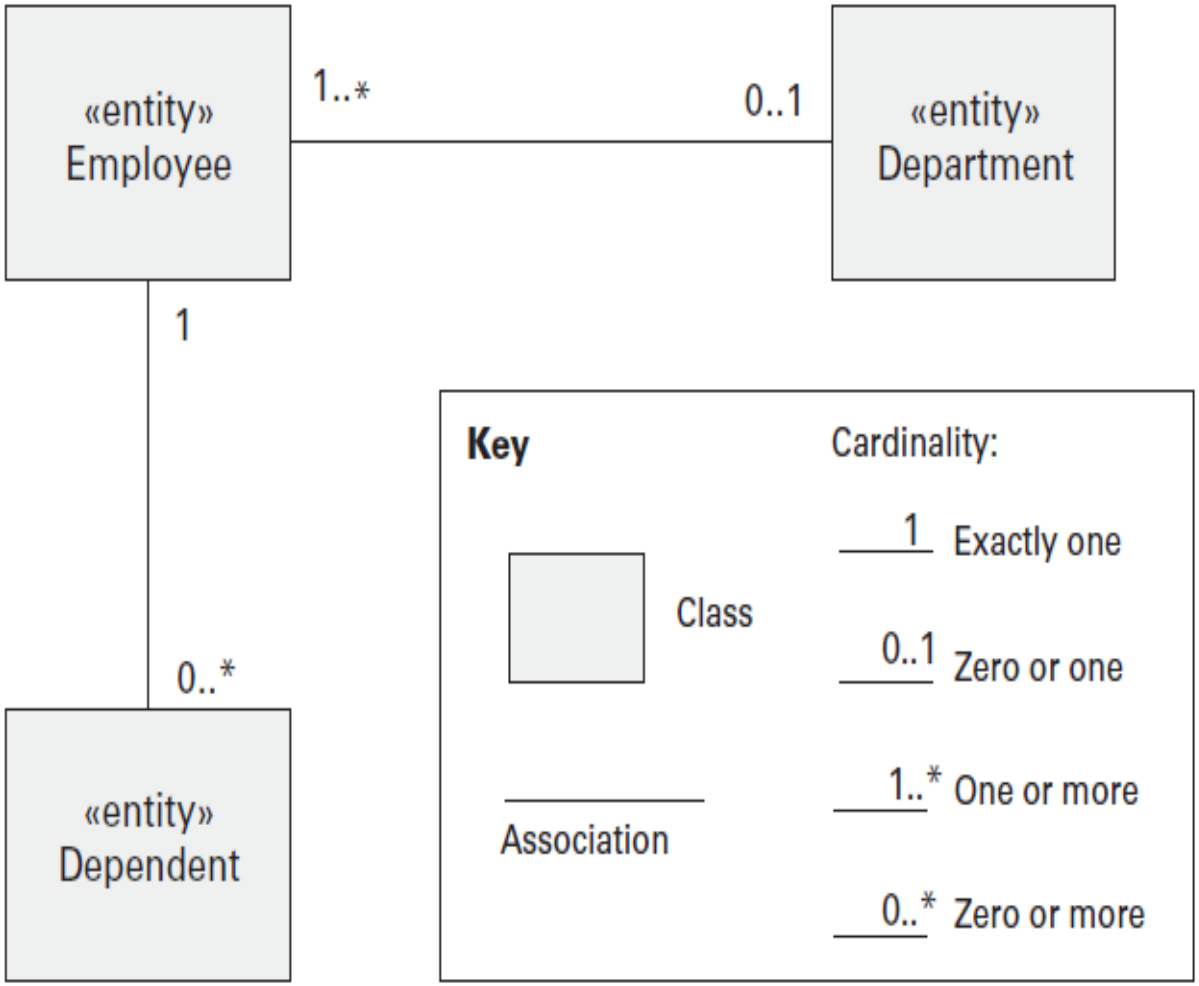

Figure 2.44
Data model (simplified) of a human resource system shown as a UML class diagram

References

1. Clements, P. et al. 2011. Documenting Software Architectures: Views and Beyond. 2nd Edition. Addison Wesley.
2. Bass, L., Clements, P. & Kazman, R. M. 2021. Software Architecture in Practice. 4th Edition. Addison-Wesley.